TECHNICAL REGULATIONS FOR BICYCLES
A PRACTICAL GUIDE TO IMPLEMENTATION

Union Cycliste Internationale

As the summit organisation of world cycle sport, the International Cycling Union (UCI) is the guarantor of the proper application of ethical and sporting regulations.

The UCI Regulations assert the primacy of man over machine. Observance of the regulations by all the parties involved guarantees sporting fairness and safety during competition.

This document does not replace Articles 1.3.001 to 1.3.025 of the UCI Regulations, but instead complements them and illustrates the technical rules defined therein. The objective of this document is to offer a definitive interpretation in order to facilitate understanding and application of the Regulations by international commissaires, teams and manufacturers.

This document applies to equipment used in the following three disciplines: road events, track events and cyclo-cross. Each discipline has its own technical characteristics and each may have variants depending on the type of event (see Articles 1.3.013, 018, 020, 021, 022, 023 and 025 of the UCI Regulations).

This document has been drawn up with the invaluable assistance of manufacturers, teams and international commissaires under the supervision of Jean Wauthier, UCI Technical Advisor.

The UCI Equipment Unit may be contacted by anyone seeking further information on the Technical Regulations. The Regulations can be consulted at the UCI website at www.uci.ch; click on the "Rules" heading. All technical innovations are subject to the application of Article 1.3.004..

Comments on the principles (Articles 1.3.006 to 1.3.010):

The bicycle is a vehicle with two wheels of equal diameter: the front wheel shall be steerable; the rear wheel shall be driven.

The bicycle must be in "working order" with a steering system acting on the steerable wheel and a propulsion system acting on the driven wheel by means of a circular movement through a chainset (using a chain) comprising one or more chainwheels and two cranks, arranged opposite each other, one as an extension of the other, in the same plane.

Bicycles used in road events must be fitted with an efficient braking system that acts on both wheels (either simultaneously or independently) operated by two brake levers. The use of a fixed gear in competition is prohibited

The bicycle must be accessible to all participants. It must be marketed (i.e. available for sale on the market) or marketable (i.e. available for sale directly from the manufacturer, by subscription or through an alternative distribution network). Prototypes and the use of equipment specially designed for a particular athlete, event or performance is prohibited. "Special design" means a bicycle with a technical added value when compared with other equipment.

The bicycle must be designed and constructed to the highest professional standards in accordance with official quality and safety criteria in a manner that respects the UCI's Technical Regulations, allowing the rider to adopt, without difficulty or risk, the required positions (support points, tip of saddle behind bottom bracket, position of hands on the handlebars, overall rider position)

With regard to measurements (Articles 1.3.011 to 1.3.018):

Bicycles shall comply with the measurements described in the appropriate Articles:

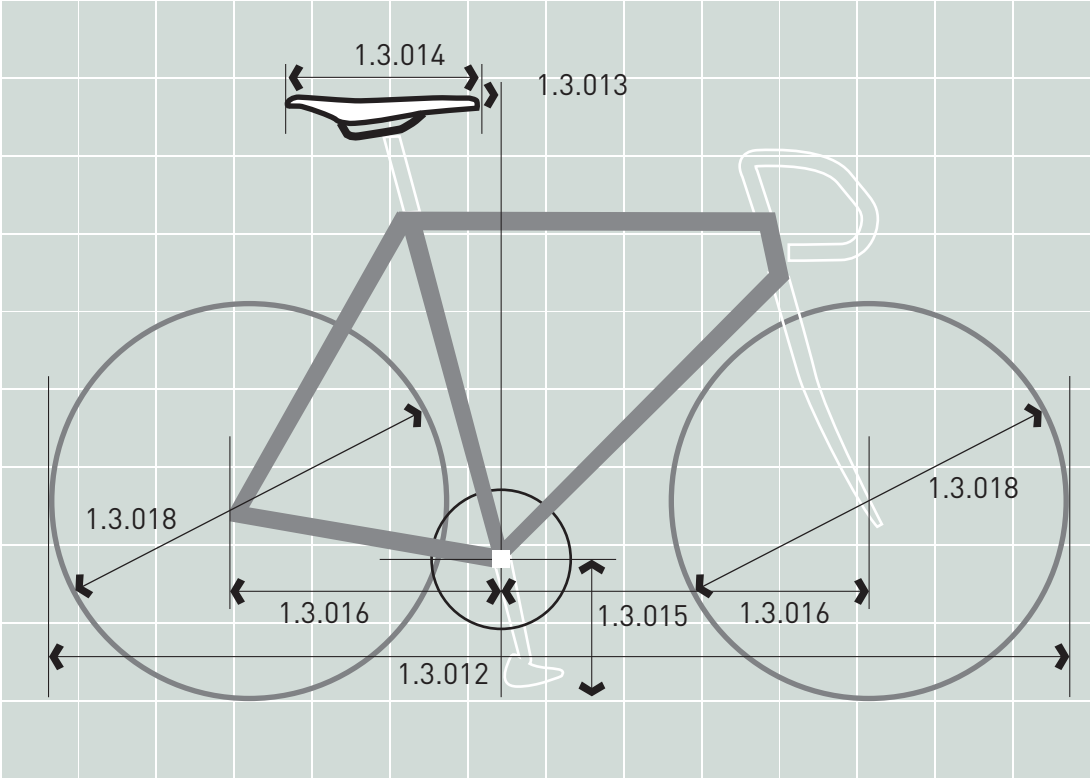

Comments on Article 1.3.018:

The regulation applies to massed-start road races and cyclo-cross. There is a distinction between standard and non-standard wheels. The latter must pass a crash test in accordance with a procedure (available from the UCI Equipment Unit) in order to be included on the list of wheels authorised for competition. This list, entitled "Non-standard wheels in conformity with Article 1.3.018", is available on the UCI website at www.uci.ch; click on the "Rules" heading.

This procedure does not apply to time trials on the road or track events.

Comments on Article 1.3.019:

The minimum weight of the bicycle (in working order) shall be 6.800 kg, considered without on-board accessories in place, that is to say those items that may be removed during the event..

Comments on Article 1.3.020:

For massed-start road races and cyclo-cross, the frame elements (arranged as shown in the diagram below) shall be tubular without excessive curvature (a straight line along the element's longitudinal axis must remain inside the element). The elements shall have a maximum transverse dimension of 8 cm and a minimum transverse dimension of 2.5 cm (reduced to 1 cm for the seat stays, chain stays and forks).

If the seat tube is extended so that it replaces the seat post, the anchorage point with the top tube is considered for the purposes of the horizontal template of the "Shape 1" diagram shown in Article 1.3.020.

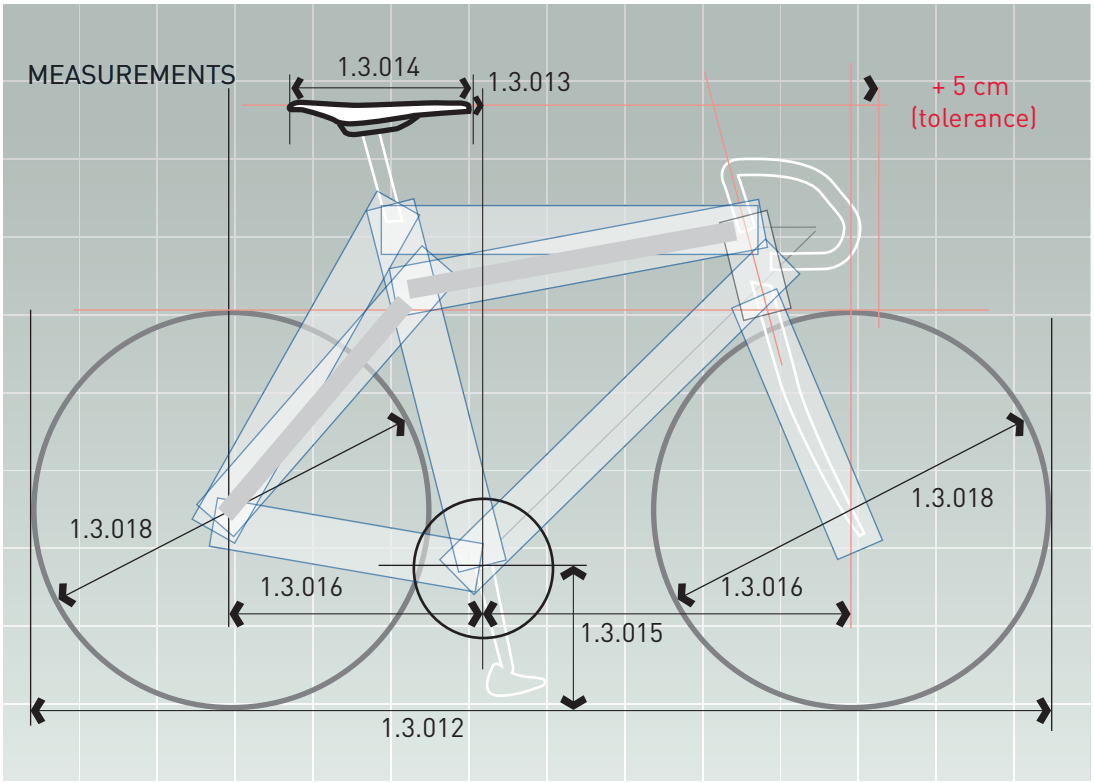
MEASUREMENTS
1.3.014
1.3.013
+ 5 cm
(tolerance)
1.3.018
1.3.018
1.3.016
1.3.016
1.3.015
1.3.012

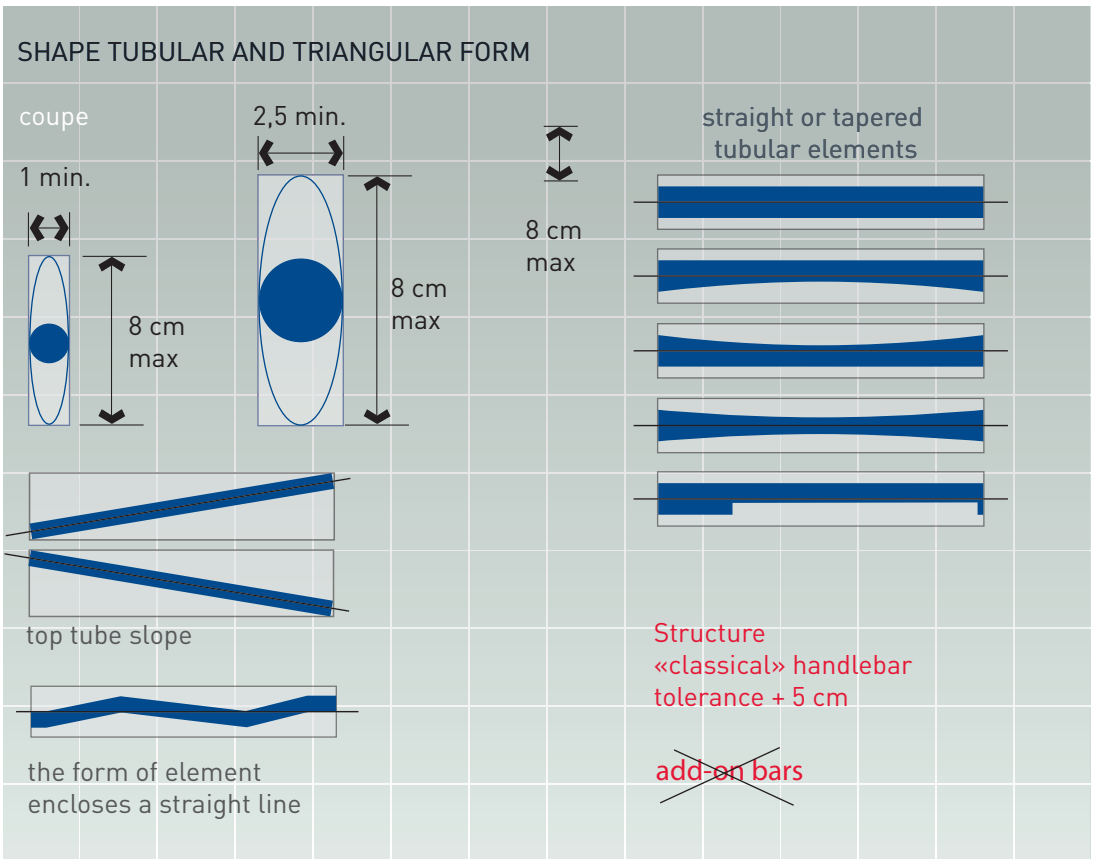
SHAPE TUBULAR AND TRIANGULAR FORM
coupe
1 min.
8 cm
max
2,5 min.
8 cm
max
8 cm
max
straight or tapered
tubular elements
top tube slope
the form of element
encloses a straight line
Structure
«classical» handlebar
tolerance + 5 cm
add-on bars

Regulation 1.3.024 (1:3 ratio) applies in this respect as a regulatory consideration. Examples:

- when using the maximum transverse dimension authorised for an element, namely 8 cm, the associated minimum transverse dimension is 8/3 = 2.66 cm;
- when using the minimum transverse dimension authorised for an element, namely 2.5 cm, the associated maximum transverse dimension is 2.5 x 3 = 7.50 cm;
- for all intermediate options, the maximum to minimum transverse dimension ratio must not exceed 3.

The minimum possible section is 2.5 cm (in all directions).

The application is the same for the seat stays, chain stays and forks. Examples:

- when using the maximum transverse dimension authorised for an element, namely 8 cm, the associated minimum transverse dimension is 8/3 = 2.66 cm;
- when using the minimum transverse dimension authorised for an element, namely 1.0 cm, the associated maximum transverse dimension is 1.0 x 3 = 3.0 cm;
- for all intermediate options, the maximum to minimum transverse dimension ratio must not exceed 3.

The minimum possible section is 1.0 cm (in all directions).

A tolerance of 1 mm is accepted for frame elements, taking into account the thickness of the surface coating (paintwork and livery).

Comments on Article 1.3.022:

Only the traditional type of handlebars is authorised for use in massed-start road races, cyclo-cross and track competitions (except for individual and team pursuit, kilometer and 500 time trials). The attachment of any additional handlebar component or extension is prohibited. The area of the point of support of the hands on the handlebars is defined by the diagram below:

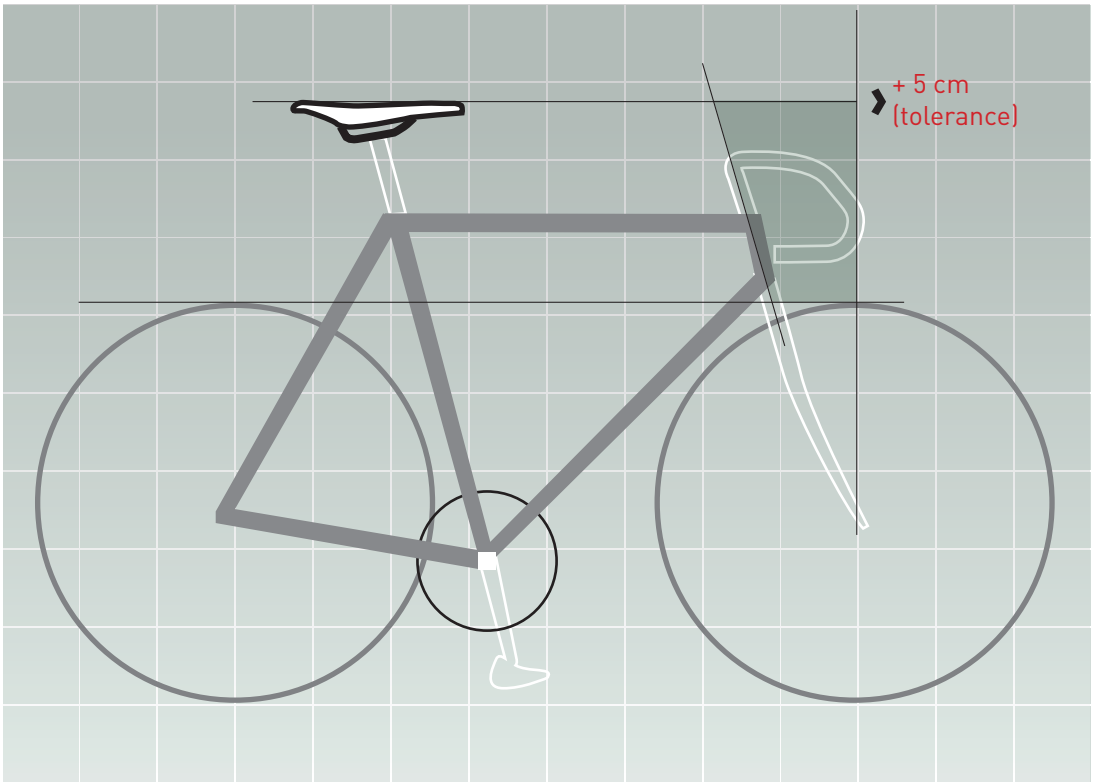

Comments on Article 1.3.021:

For time trials on the road and track competitions the elements making up the frame are not restricted provided they fit freely inside a defined template (see regulations) and comply with the 1:3 ratio described above (comments on Article 1.3.020).

If the seat tube is extended so that it replaces the seat post, the template is extended in the same direction.

For offset fork designs, the pivoting part must be contained within the template of the head tube.

The bicycle must be designed and adjusted in such a manner that the rider can adopt a regulatory position as defined by Article 1.3.023.

Comments on Article 1.3.023:

For time trials on the road and track competitions (pursuit, kilometre and 500 m time trials) bicycles may be fitted with an "additional handlebar" (extension) upon which elbow or forearm rests are authorised without these representing supplementary points of support (in contradiction of Regulation 1.3.008). **The rider's forearms must be positioned in a horizontal plane and the extension designed in such a manner that the rider can adopt and maintain a regulatory position for the entire duration of the event**. The area of the points of support is defined by the diagram below:

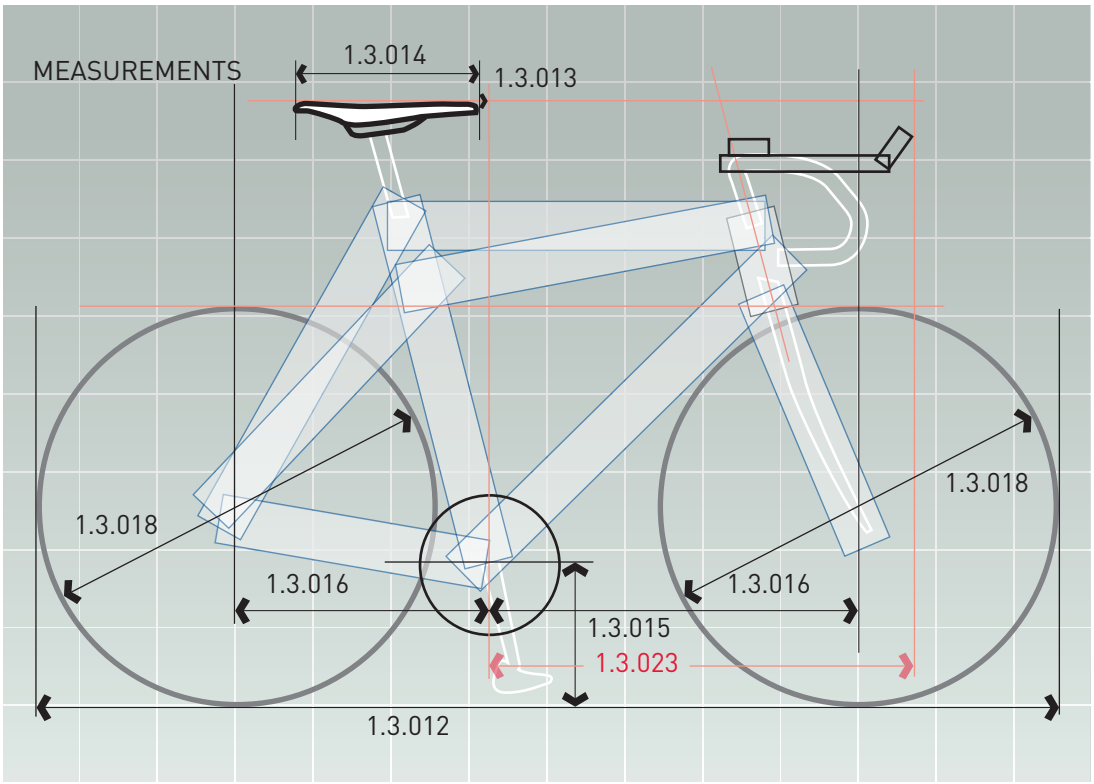

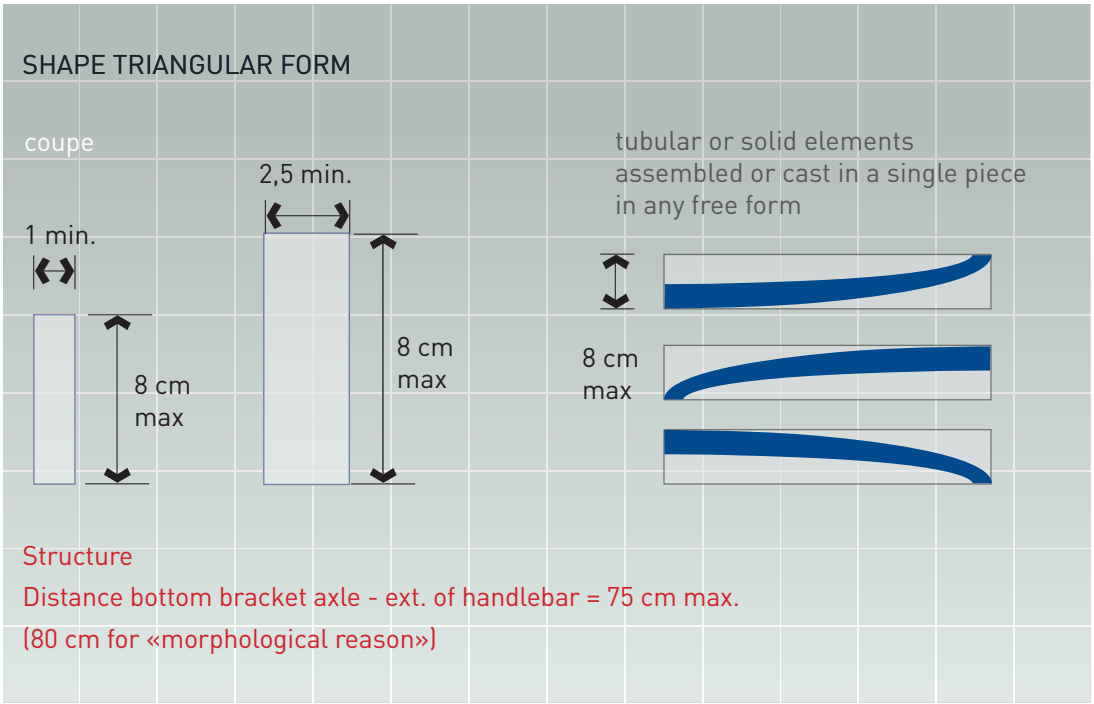

The profile of the extension must conform to the 1:3 ratio in accordance with Article 1.3.024. The extension must be fixed and not feature a system that would allow a change of length or angle during the race.

The extension, as the name indicates, extends the handlebars in the horizontal plane (see diagram illustrating Article 1.3.023). The extension shall be fitted with handgrips (point of contact for the hands). These may be located on the handlebar extension horizontally, inclined or vertically. In all cases, the handgrips must be identifiable and used solely as the contact point for the hands (see diagram illustrating Article 1.3.023).

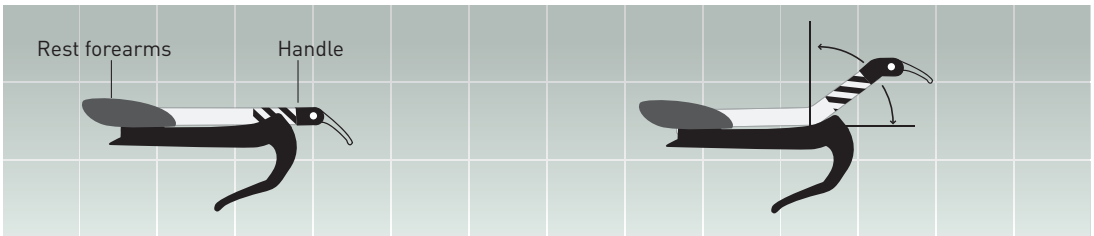

Extensions that are not horizontal, raised or arc-shaped or not horizontal are not authorised and neither are handlebar extension assemblies constructed on two levels.

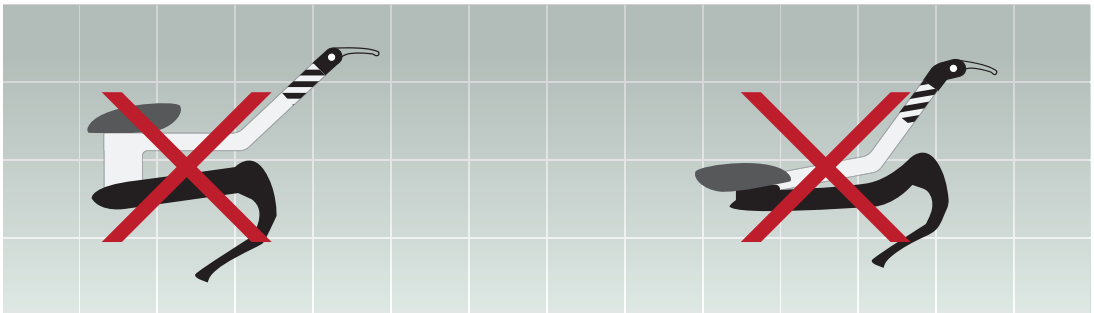

The rider's position for time trial on the road and for the pursuit, kilometre and 500 m time trials on the track is defined by two measurements of the bicycle: the position of the tip of the saddle behind the bottom bracket (- 5 cm minimum) and the advanced position using the extension (+ 75 cm maximum). These measurements are verified by commissaires using a checking device. The checks are conducted in the time trial start area. Once a bicycle has been checked, it cannot be removed from the start enclosure. If it is removed, a second check will be required. The saddle position is measured from the tip of the saddle to the vertical plane passing through the centre of the bottom bracket axle. The advanced position is measured along the handlebar extension (overall length) from the vertical plane passing through the centre of the bottom bracket axle. If the handlebar extension is fitted with gear levers, the distance is taken from the axis point of the gear lever. The gear lever beyond the axis point is allowed to extend beyond 75 cm provided that it does not offer an alternative use (e.g. a lever modified such that the hand contact point is beyond 75 cm). In the case of an electrical gear change system operated by a push button, the distance is measured to the end of the extension (overall length). Any rider who considers, for morphological reasons, that he/she cannot respect the regulations concerning the position of the saddle behind the bottom bracket or the handlebar extension may request a dispensation from the commissaire when presenting his/her licence. **The request for an exemption from the regulations can only apply to one element, either the saddle position or the advanced handlebar position**. Experience has shown, and has been confirmed by models of positions, that requests for exemption for the saddle position (less than - 5 cm) are usually presented by riders of a small build whereas requests for exemption of the advanced position (in excess of +75 cm) are usually presented by riders of a large stature, although there is no absolute rule. The technical commissaire considers the nature of the exemption requested by the rider. The commissaire notes the details in an «exemption report» that accompanies the final race report. The commissaire can check the validity of the request in accordance with the methods defined in the Technical Regulations.

The check of the bicycle at the start line consists of verifying that the exemption that has been granted has been complied with. It is not desirable to carry out a physical check in the time trial start area, except in suspicious cases.

Comments on Article 1.3.024:

Protective screens, aerodynamic shapes, fairings or any other device that is added or forms part of the structure, and that is destined or has the effect of reducing wind resistance, are prohibited.

Article 1.3.024 establishes that aerodynamic assemblies and protuberances on the head tube are prohibited.

The 1:3 ratio applies to the shapes of bicycle elements, with the exception of moving parts (wheels and chainsets[1]) and the saddle. The regulation does not apply to the pedals, front or rear derailleur bodies or wheel brake mechanisms. The regulation does, however, apply to all elements making up the frame architecture as well as frame accessories (stem, handlebars, handlebar extension, seat post).

However, the regulation on the subject of the shape of bicycle elements (1:3 ratio) does not exempt manufacturers from complying with the official «racing bicycle» standards when concerning uncovered projections (must be rounded for safety).

As for brake levers, gear levers, bottle cages and other items (not subject to the 1:3 regulation), «knife-edge profile» shapes are not allowed (see uncovered projections - EN and similar standards).

[1] The pedal crank is not subject to the regulation, but its transverse dimension is restricted to 8 cm.

If you have any doubts about the compliance of equipment (bicycles, frame, forks, wheels, accessories) for prototypes or products under development, you are advised to consult the UCI Equipment Unit for an official ruling. Confidentiality is guaranteed.

Contact:

International Cycling Union (UCI)

Equipment Unit

CH-1860 Aigle (Switzerland)

Tel.: +41 (0)24 468 58 11

Fax: +41 (0)24 468 58 12

materiel@uci.ch

Edition June 2009

Union Cycliste Internationale